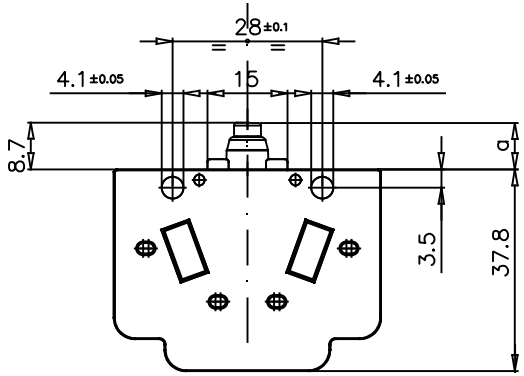

Galvanically isolated contact bridges

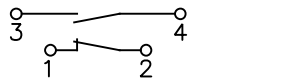

MAX. OPERATING FORCE	N 3,47±0,4
RELEASE FORCE	N 3,2
REST POSITION	a mm 8,8±0,2
TRIPPING POSITION	a mm 6,55±0,20
RELEASE POSITION	a mm 7,8±0,20
OVER TRAVEL LIMIT	a mm 5,3

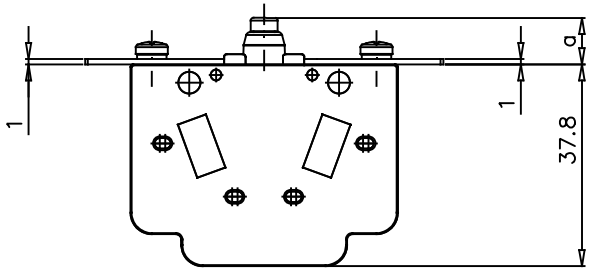

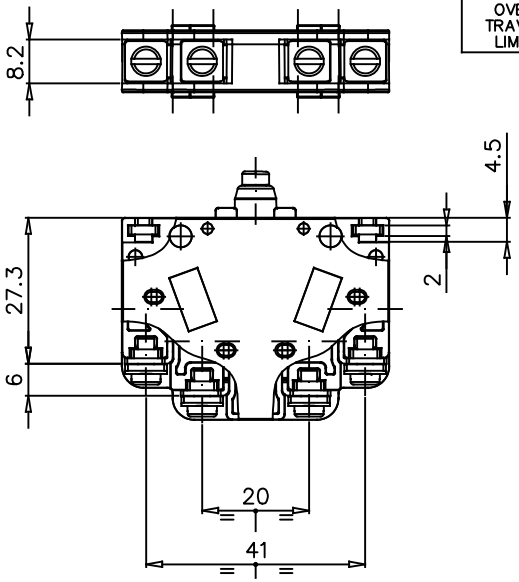

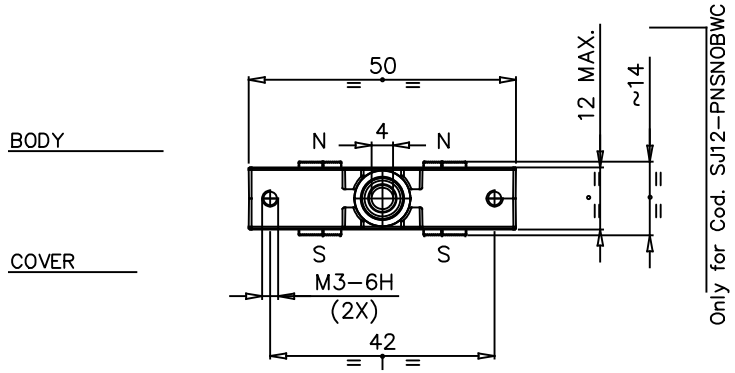

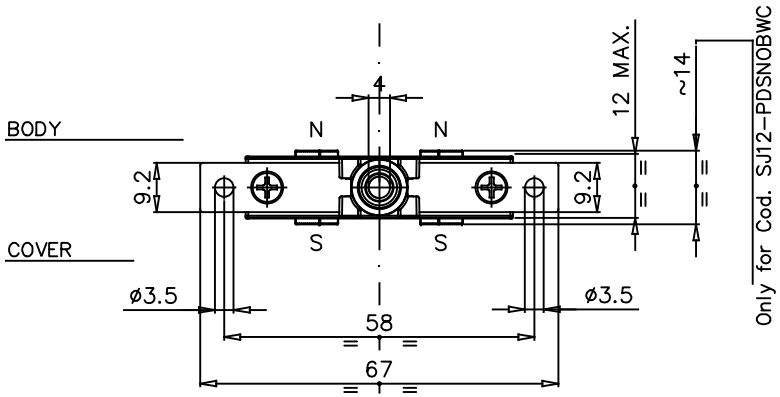

EXECUTIONS WITH FIXING DISTANCE 28 mm	
CODE	FEATURE
SJ12–PNSNOUW*	MICROSWITCH COMPLETE WITH LEVER – STD.TYPE CONTACTS
SJ12–PNGNOUW*	MICROSWITCH COMPLETE WITH LEVER – GOLD PLATE CONTACTS
SJ12–PNSNOBW*	MICROSWITCH COMPLETE WITH LEVER – WITH SOLID SILVER CONTACTS AND BLOWING MAGNETS

EXECUTIONS WITH FIXING DISTANCE 58 mm	
CODE	FEATURE
SJ12–PDSNOUW*	MICROSWITCH COMPLETE WITH LEVER – STD.TYPE CONTACTS
SJ12–PDGNOUW*	MICROSWITCH COMPLETE WITH LEVER – GOLD PLATE CONTACTS
SJ12–PDSNOBW*	MICROSWITCH COMPLETE WITH LEVER – WITH SOLID SILVER CONTACTS AND BLOWING MAGNETS

NOTE : PLACE THE PERMANENT MAGNETS SO THAT THE POLARITIES ARE AS SHOWN IN THE DRAWING

NOTE : 2 µm GOLDEN PLATING

* COVER MATERIAL	
CODE LETTER	MATERIAL
C	PC
N	PA66
P	PEI

SIMBOLI UTILIZZATI PER IDENTIFICARE LA QUOTA IN REVISIONE DI MODIFICA

##○## SIMBOLO UTILIZZATO PER LE QUOTE SOGGETTE A CONTROLLO INTERNO

MODIFICHE	MODIFICHE	MODIFICHE	MODIFICHE	MODIFICHE	MODIFICHE	MODIFICHE	MODIFICHE
1 C.M. 0001 19/09/24 MU							

				3 2 1 Rifer.
				Funz.
				Accop.
				Cliente

	DISEGNATO	APPROVATO	VISTO C.C.
DATA	26/11/20	26/11/20	26/11/20
FIRMA	GM	VELLUTINI	MR

MATERIALE: VEDI TABELLA

TRATTAMENTO

TOLLERANZE PER DIMENSIONI LINEARI ED ANGOLARI PRIVE DI INDICAZIONI DI TOLLERANZE SPECIFICHE UNI EN 22768–1
MOLTO GROSSOLANA ☐ GROSSOLANA ☐ MEDIA ◪ FINE ☐

SCALA 1:1

SOSTITUISCE

PESO

REVISIONE 1 2 3 4

ISOLEX
ISOLEX Milano Italy

DESCRIZIONE: SNAP–ACTION MICROSWITCH IP67 (1NO + 1 NC)

COD. VEDI TABELLA

DIS. ID10213

F. 1 DI 1

FORMATO A3