Galvanically isolated contact bridges

POSITIVE OPENING

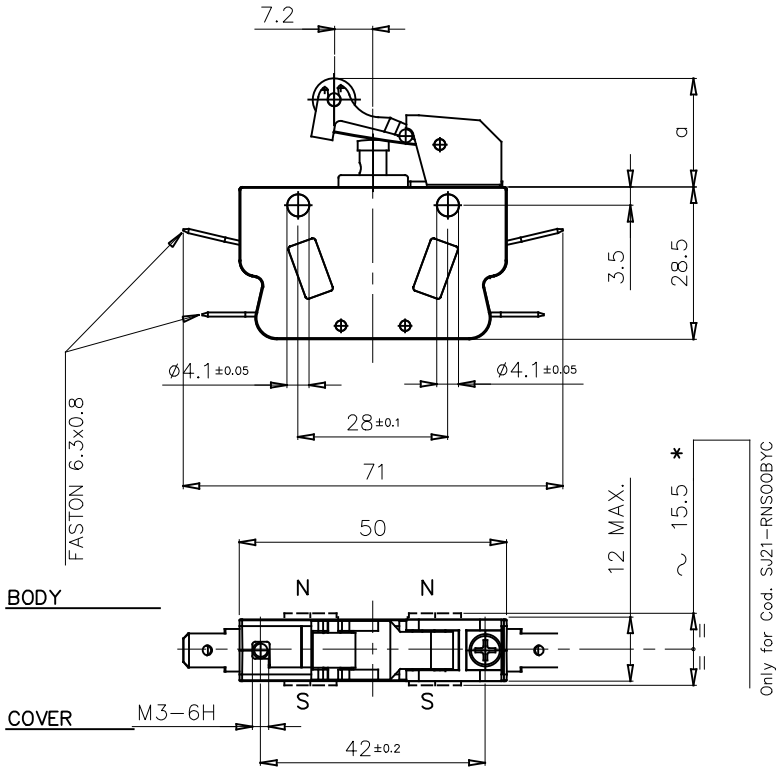

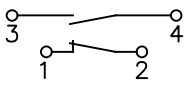

MAX. OPERATING FORCE	N
	0,59
RELEASE FORCE	N
	1
REST POSITION	a mm
	20,1±0,2
TRIPPING POSITION	a mm
	16,0±0,2
RELEASE POSITION	a mm
	17,8±0,2
OVER TRAVEL LIMIT	a mm
	14

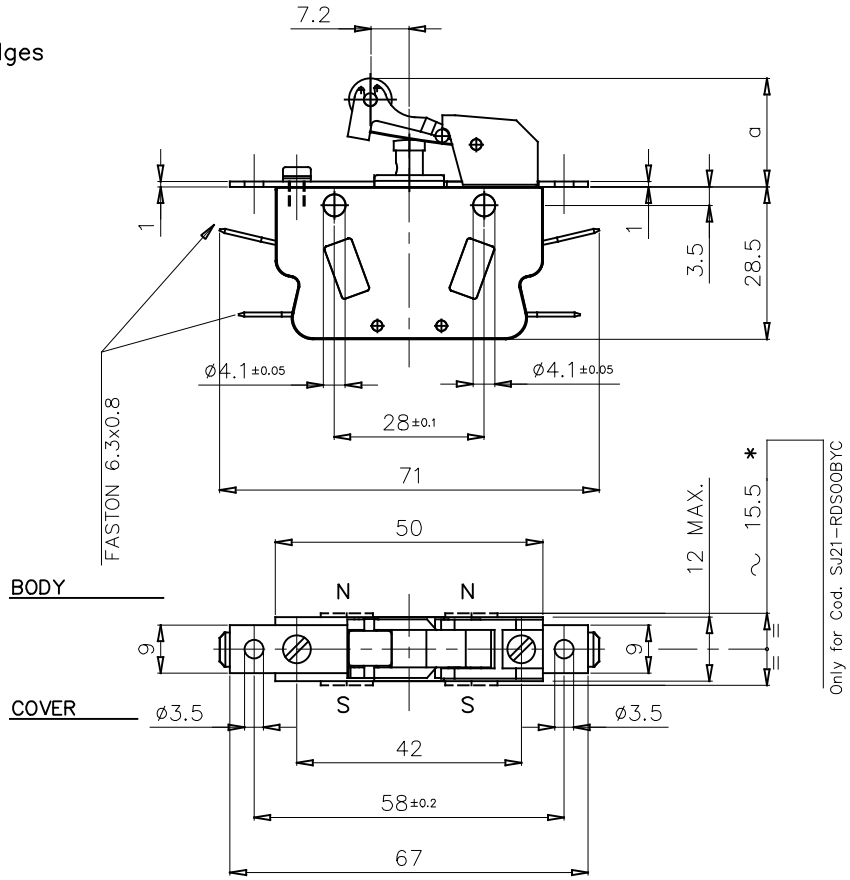

EXECUTIONS WITH FIXING DISTANCE 28 mm	
CODE	FEATURE
SJ21-RNSOOUY*	MICROSWITCH COMPLETE WITH LEVER - STD.TYPE CONTACTS
SJ21-RNGOOUY*	MICROSWITCH COMPLETE WITH LEVER - GOLD PLATE CONTACTS
SJ21-RNSOOBY*	MICROSWITCH COMPLETE WITH LEVER - WITH SOLID SILVER CONTACTS AND BLOWING MAGNETS

EXECUTIONS WITH FIXING DISTANCE 58 mm	
CODE	FEATURE
SJ21-RDSOOUY*	MICROSWITCH COMPLETE WITH LEVER - STD.TYPE CONTACTS
SJ21-RDGOOUY*	MICROSWITCH COMPLETE WITH LEVER - GOLD PLATE CONTACTS
SJ21-RDSOOBY*	MICROSWITCH COMPLETE WITH LEVER - WITH SOLID SILVER CONTACTS AND BLOWING MAGNETS

NOTE : PLACE THE PERMANENT MAGNETS SO THAT THE POLARITIES ARE AS SHOWN IN THE DRAWING

NOTE : 2 µm GOLDEN PLATING

* COVER MATERIAL	
CODE LETTER	MATERIAL
C	PC
N	PA66
P	PEI

SIMBOLI UTILIZZATI PER IDENTIFICARE LA QUOTA IN REVISIONE DI MODIFICA

##○## SIMBOLO UTILIZZATO PER LE QUOTE SOGGETTE A CONTROLLO INTERNO

MODIFICHE				
1	C.M. 0001 19/09/24 MU			

	3	2	1	
				Rifer.
				Funz.
				Accop.
				Cliente

	DISEGNATO	APPROVATO	VISTO C.C.
DATA	08/06/23	08/06/23	08/06/23
FIRMA	GM	MR	MR

MATERIALE

TRATTAMENTO

TOLLERANZE PER DIMENSIONI LINEARI ED ANGOLARI PRIVE DI INDICAZIONI DI TOLLERANZE SPECIFICHE UNI EN 22768-1

MOLTO GROSSOLANA ☐ GROSSOLANA ☐ MEDIA ◪ FINE ☐

SCALA 1:1

SOSTITUISCE

A3

REVISIONE 1 2 3 4 5 6 7

ISOLEX Milano Italy

DESCRIZIONE

SNAP-ACTION MICROSWITCH SJ21 (1N.O. + 1N.C.) POSITIVE OPEN WITH OPERATION LEVER AND FASTON TERMINALS

COD. VEDI TABELLA

DIS. ID10254Y

F. 1 DI 1

ACAD